| REVISION | | | | | |
|---|---|---|---|---|---|
| ZONE | REV | FROM | TO | DATE | APPROVED |
| | | | | | |

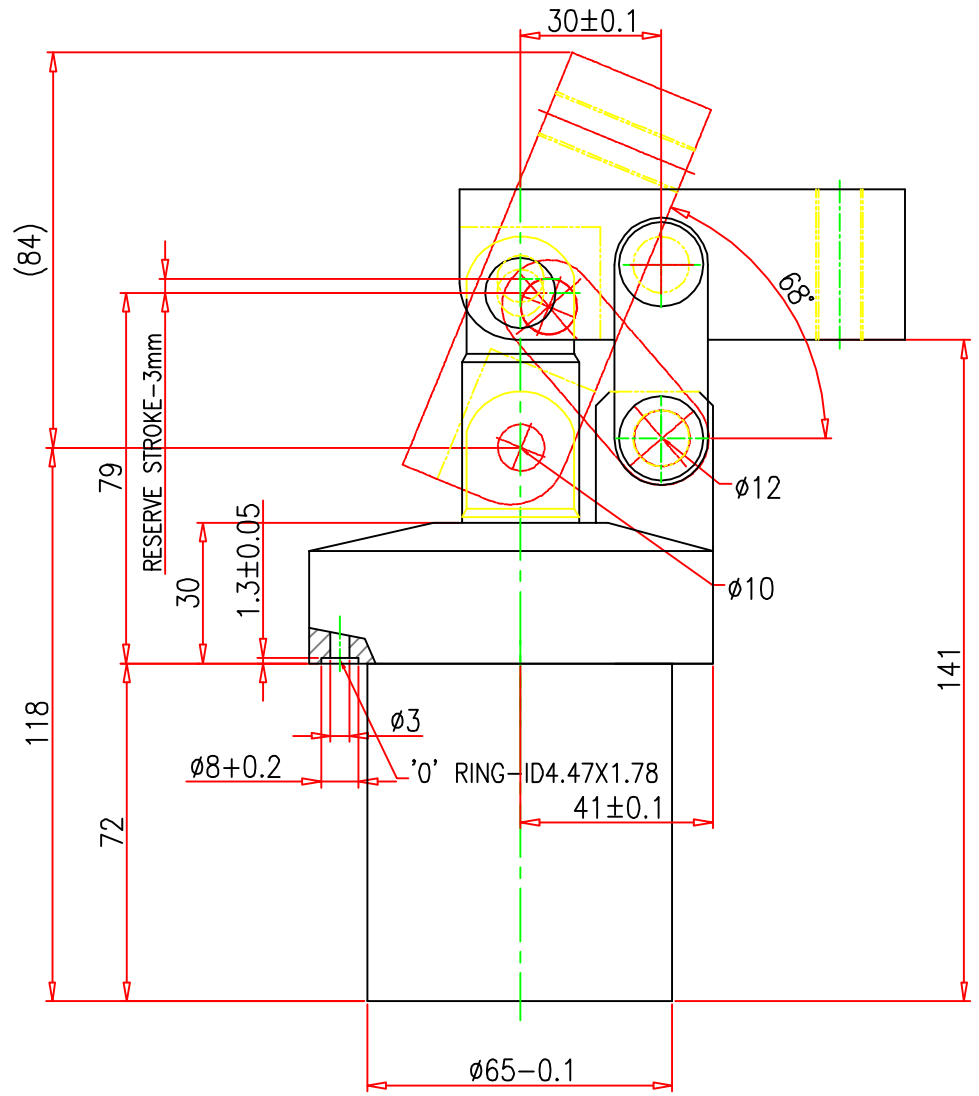


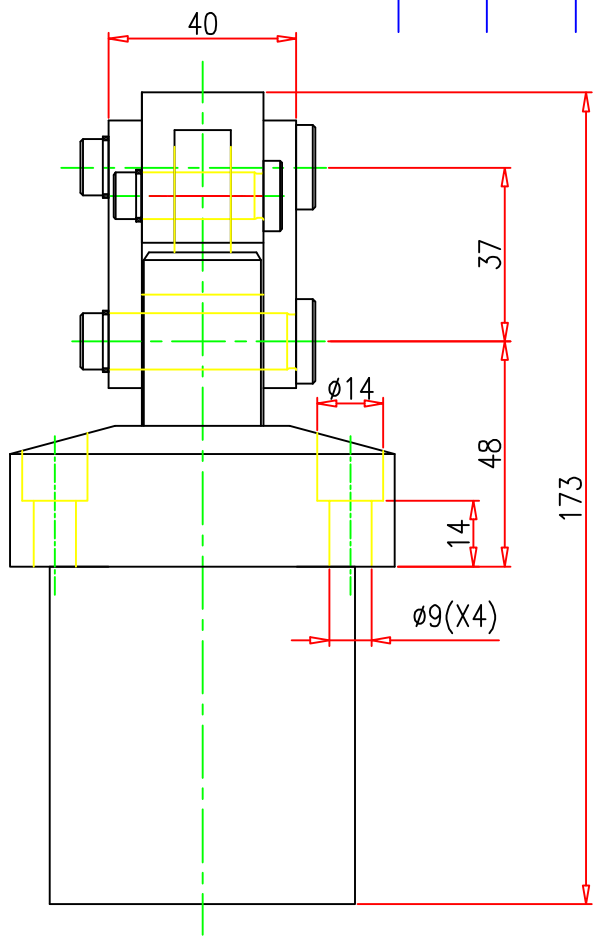


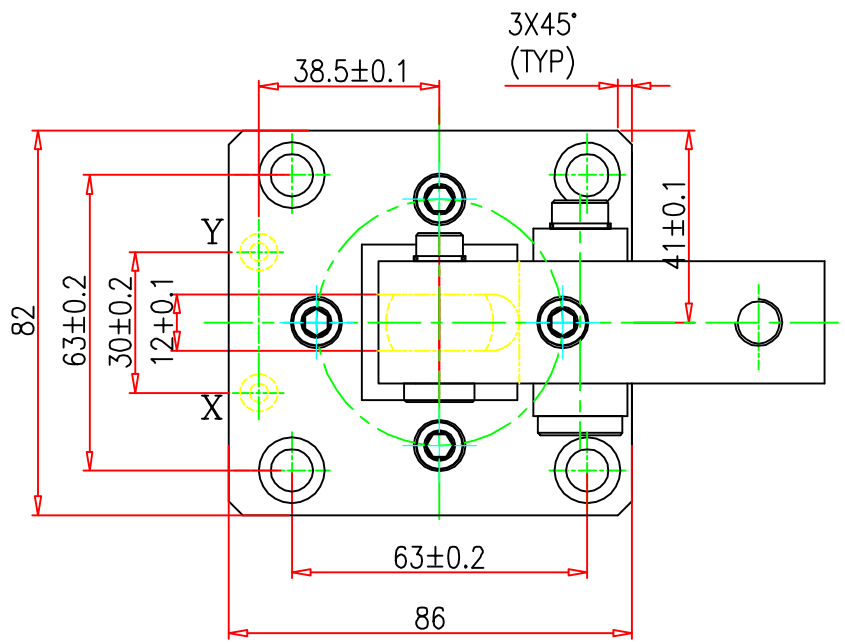


*X– Clamp port*

*Y – Declamp port*

*Specification:–*

Type : Doble acting hydraulic cylinder.
*Bore dia = 40 mm, rod dia = 25 mm*
*Stroke = 33; Reserve Stroke = 3 mm*
Operating pressure : max 150 bar/min 25 bar
Medium :Hydraulic oil
(servo system HLP46/HLP68)

1.0 GENERAL
1.1 ALL DIMENSIONS ARE IN MM.
1.2 DO NOT SCALE THE DRG.IF IN DOUBT ASK.
1.3 SUBJECT TO CHANGE FOR IMPROVEMENT.

| SURFACE FINISH | | | | | | | | | | |
|---|---|---|---|---|---|---|---|---|---|---|
| Ra value µm | 0.025 | 0.05 | 0.1 | 0.2 | 0.4 | 0.8 | 1.6 | 3.2 | 6.3 | 12.5 | 25 | 50 | 100 |

GENERAL TOLERANCES WHERE NOT SPECIFIED

| LINEAR – LENGTH OR DIAMETER | | | | | | ANGULAR–LENGTH IN MM OF SHORT SIDE OF ∠ | | | |
|---|---|---|---|---|---|---|---|---|---|
| 0.5–6 | 6–30 | 30–120 | 120–315 | 315–1000 | 1000–2000 | UPTO 6 | 6–30 | 30–120 | 120–400 |
| ±0.1 | ±0.2 | ±0.3 | ±0.5 | ±0.8 | ±1.2 | ±1° | ±30' | ±20' | ±10' |

**QUICLOC PVT LTD**
**B'lore - 70**

| | | |
|---|---|---|
| SCALE: 1;1 | – | TITLE: *VERTICAL SWING CLAMP MANIFOLD TYPE–D/A* |
| MATERIAL: *XXX* | SHEET NO: 1 OF: 1 | |
| GROUP NO: | | |
| SUPERCEDED BY: – | REPLACES: – | |
| DRAWING NO: *S31303–M* | | |

| | NAME | DATE |
|---|---|---|
| DESIGN | *TIRUMAL* | *22.08.08* |
| DRAWN | *TIRUMAL* | |
| CHECKED | | |
| APPROVED | | |

MACHINE TYPE
CUSTOMER:

SHEET FORMATS–1,FORMAT NO: F–8–DGN–09 DT.01–11–05 Rew No–00–A3