REVISION					
ZONE	REV	FROM	TO	DATE	APPROVED

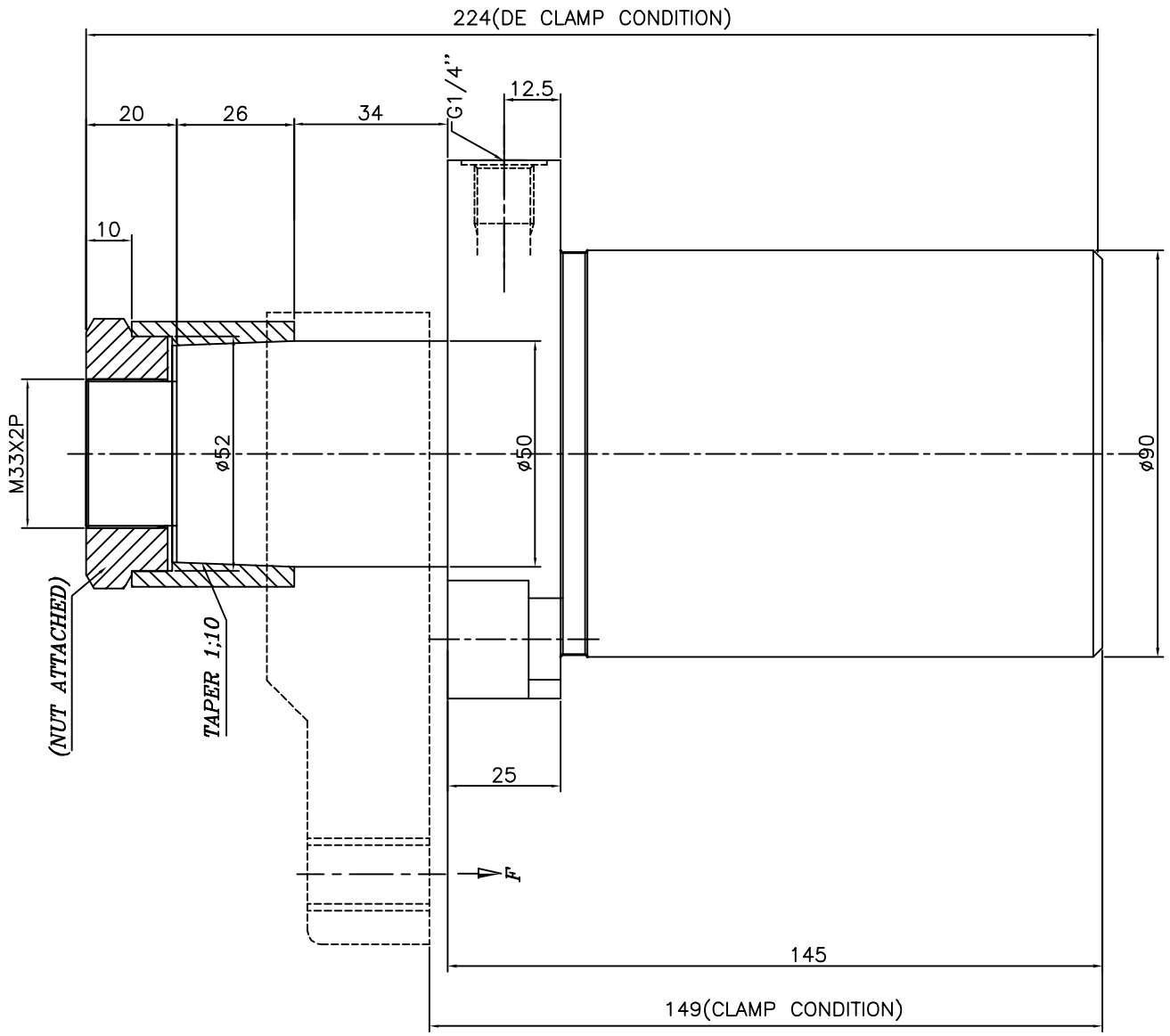

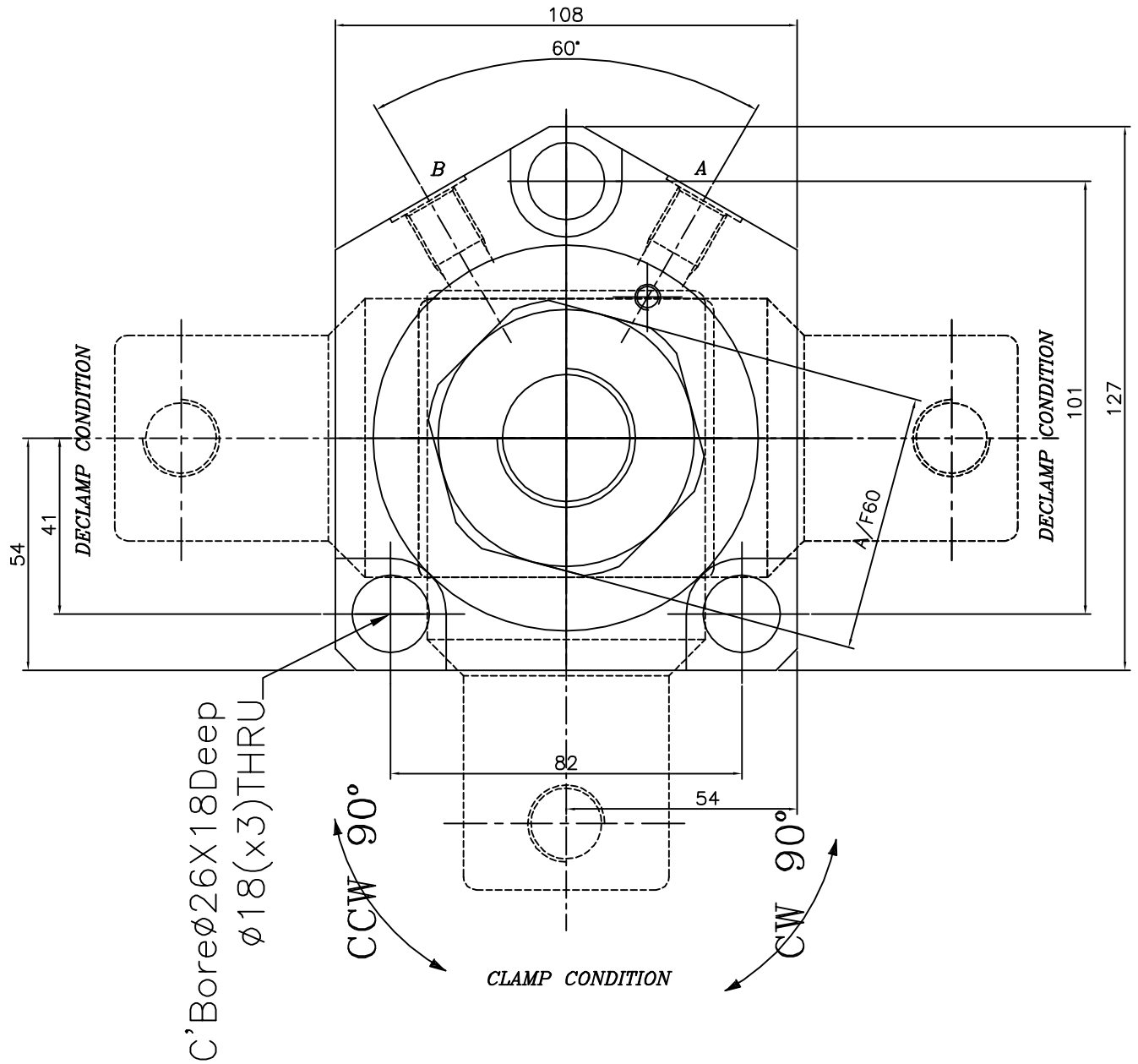

A–Clamp port
B–Declamp port

Specification:–

Type : Doble acting hydraulic cylinder.
Bore dia = 63 mm, rod dia = 50 mm
Clamp Stroke =10; Swing Stroke = 20 mm
Total Stroke = 30
Arm swing will be 90°±2°
Operating pressure : max 250 bar/min 10 bar
Medium :Hydraulic oil
(servo system HLP46/HLP68)
Model NO–C.W–S41305
C.C.W–S41306

1.0 GENERAL
1.1 ALL DIMENSIONS ARE IN MM.
1.2 DO NOT SCALE THE DRG.IF IN DOUBT ASK.
1.3 SUBJECT TO CHANGE FOR IMPROVEMENT.

SHEET FORMATS–1,FORMAT NO: F–8–DGN–09 DT.01–11–05 Rew No–00–A3

SURFACE FINISH											
Ra value µm	0.025	0.05	0.1	0.2	0.4	0.8	1.6	3.2	6.3	12.5	25	50	100

GENERAL TOLERANCES WHERE NOT SPECIFIED

LINEAR – LENGTH OR DIAMETER						ANGULAR–LENGTH IN MM OF SHORT SIDE OF ∠			
0.5–6	6–30	30–120	120–315	315–1000	1000–2000	UPTO 6	6–30	30–120	120–400
±0.1	±0.2	±0.3	±0.5	±0.8	±1.2	±1°	±30'	±20'	±10'

QUICLOC PVT LTD
B'lore - 70

SCALE: 1;1	–	TITLE: *TOP SWING CLAMP DOUBLE ACTING*	MATERIAL: *XXX*	SHEET NO: 1 OF: 1
	NAME	DATE	GROUP NO:	
DESIGN	*TIRUMAL*	*22.08.08*	SUPERCEDED BY: –	REPLACES: –
DRAWN	*TIRUMAL*	*22.08.08*	MACHINE TYPE	
CHECKED			CUSTOMER:	DRAWING NO: –
APPROVED				