REVISION					
ZONE	REV	FROM	TO	DATE	APPROVED

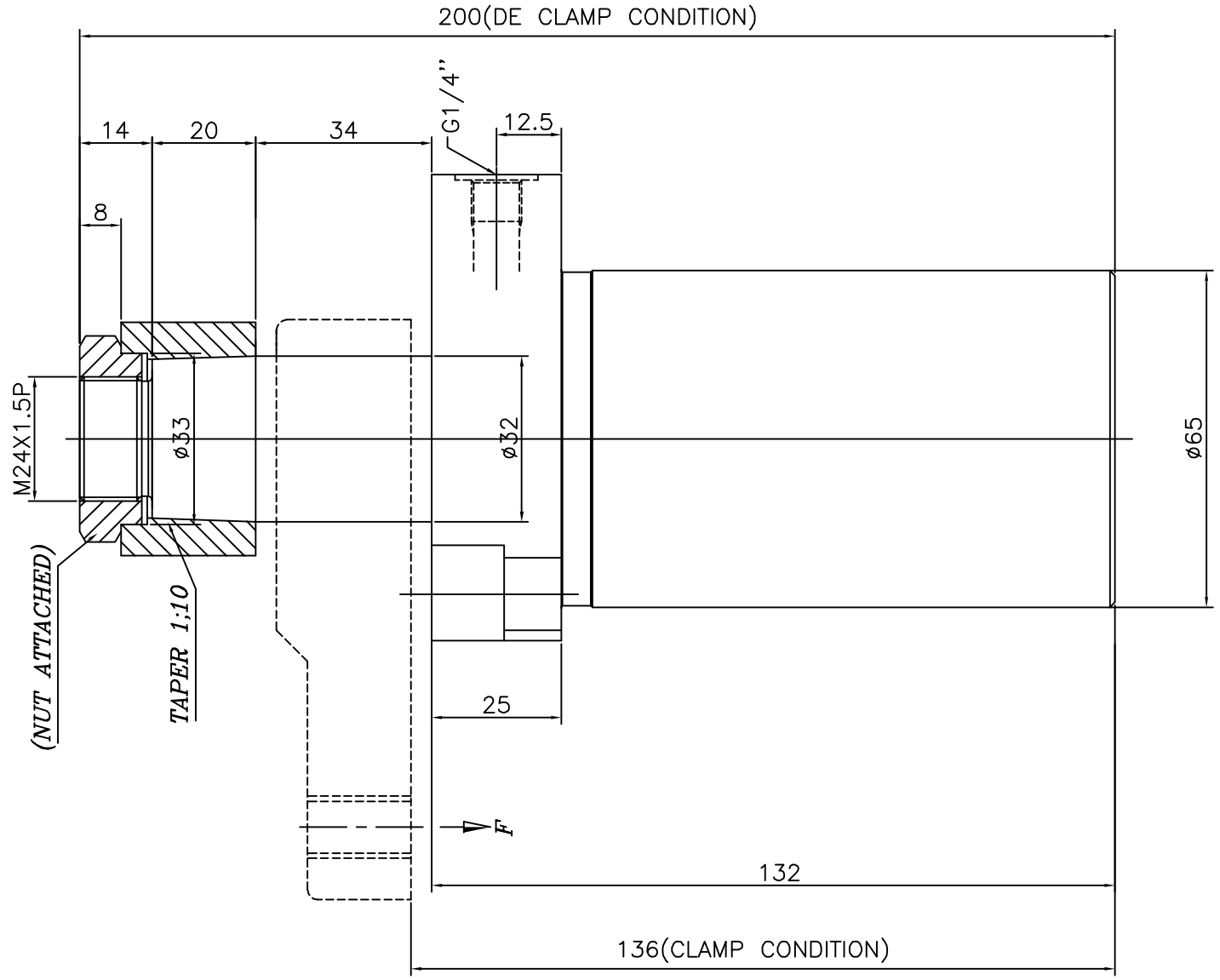

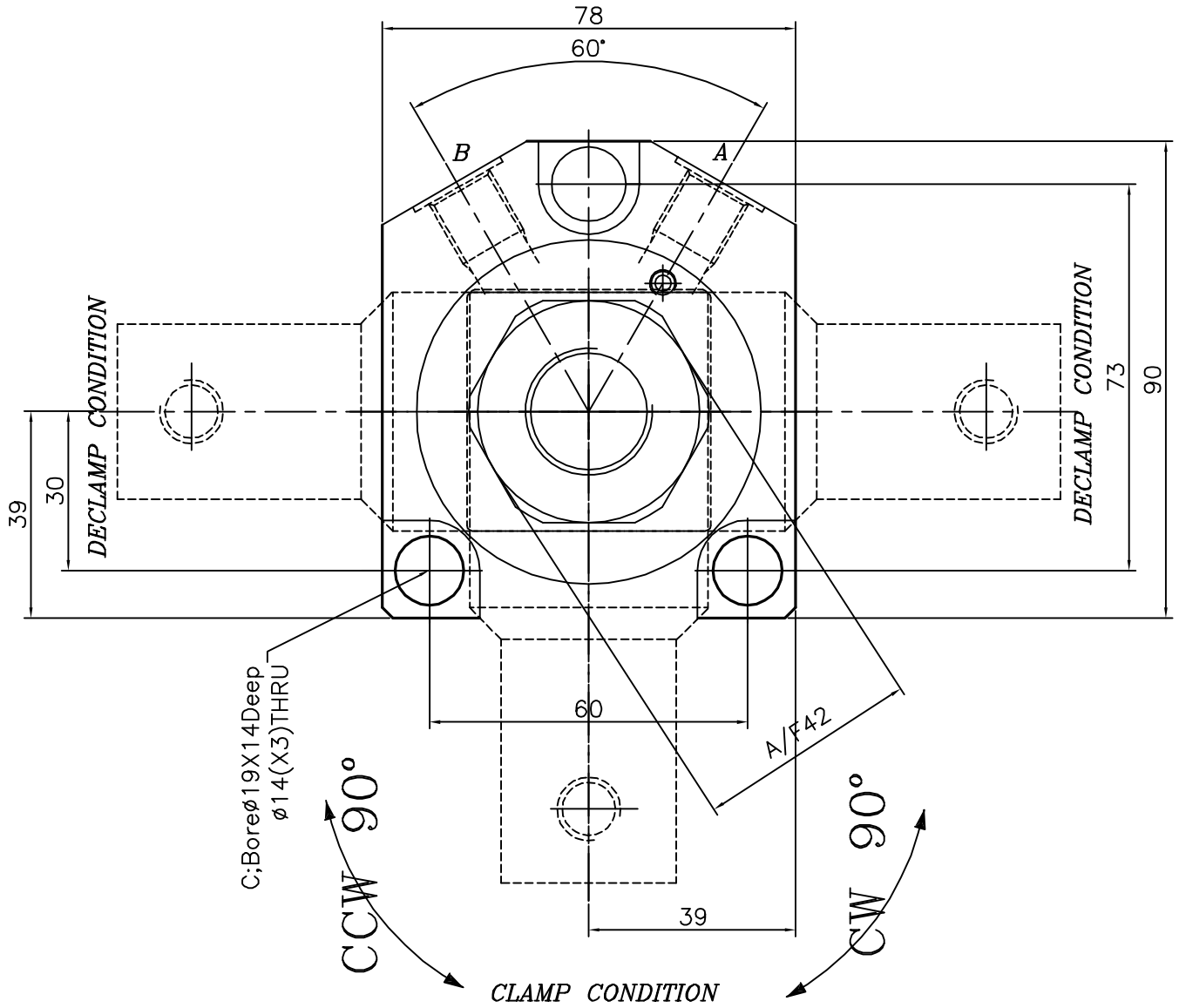

A–Clamp port
B–Declamp port

Specification:–

Type : Doble acting hydraulic cylinder.
Bore dia = 40 mm, rod dia = 32 mm
Clamp Stroke =10; Swing Stroke = 20 mm
Total Stroke = 30
Arm swing will be 90°±2°
Operating pressure : max 150 bar/min 25 bar
Medium :Hydraulic oil
(servo system HLP46/HLP68)
Model NO–C.W–S41303
C.C.W–S41304

1.0 GENERAL
1.1 ALL DIMENSIONS ARE IN MM.
1.2 DO NOT SCALE THE DRG.IF IN DOUBT ASK.
1.3 SUBJECT TO CHANGE FOR IMPROVEMENT.

SURFACE FINISH										
Ra value µm	0.025	0.05	0.1	0.2	0.4	0.8	1.6	3.2	6.3	12.5	25	50	100

GENERAL TOLERANCES WHERE NOT SPECIFIED

LINEAR – LENGTH OR DIAMETER						ANGULAR–LENGTH IN MM OF SHORT SIDE OF ∠			
0.5–6	6–30	30–120	120–315	315–1000	1000–2000	UPTO 6	6–30	30–120	120–400
±0.1	±0.2	±0.3	±0.5	±0.8	±1.2	±1°	±30'	±20'	±10'

QUICLOC PVT LTD
B'lore - 70

SCALE: 1;1	–	TITLE: *TOP SWING CLAMP DOUBLE ACTING*
	NAME	DATE
DESIGN	*TIRUMAL*	*22.08.08*
DRAWN	*TIRUMAL*	*22.08.08*
CHECKED		
APPROVED		

MACHINE TYPE
CUSTOMER:

MATERIAL: *XXX*
SHEET NO: 1 OF: 1
GROUP NO:
SUPERCEDED BY –
REPLACES –
DRAWING NO: –

SHEET FORMATS–1,FORMAT NO: F–8–DGN–09 DT.01–11–05 Rew No–00–A3