SHEET FORMATS-1,FORMAT NO: F-8-DGN-09 DT.01-11-05 Rew No-00-A3

REVISION					
ZONE	REV	FROM	TO	DATE	APPROVED

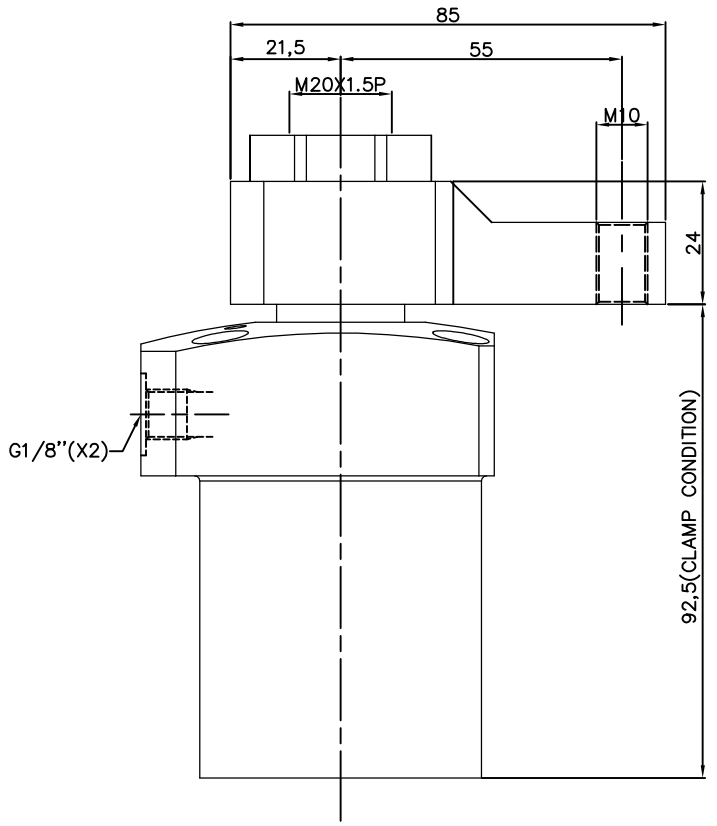

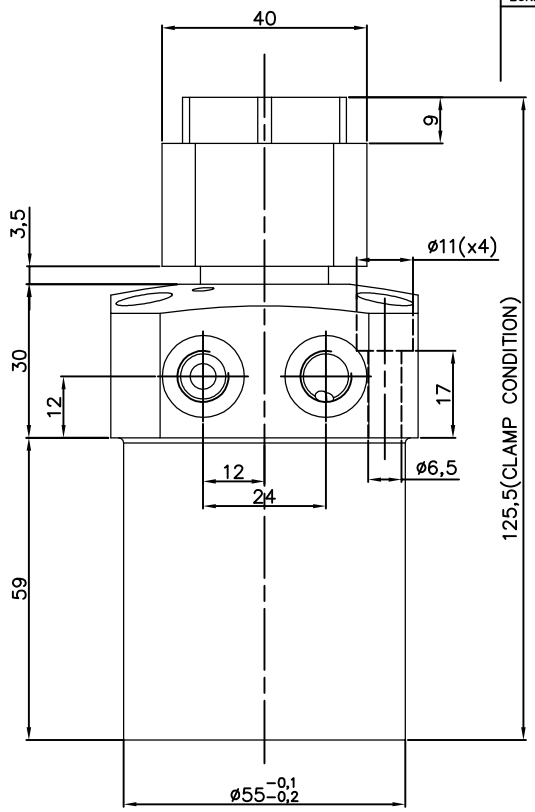

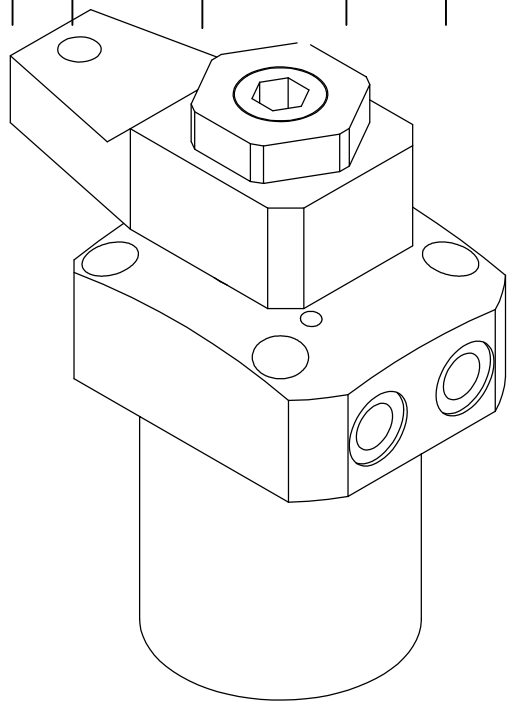

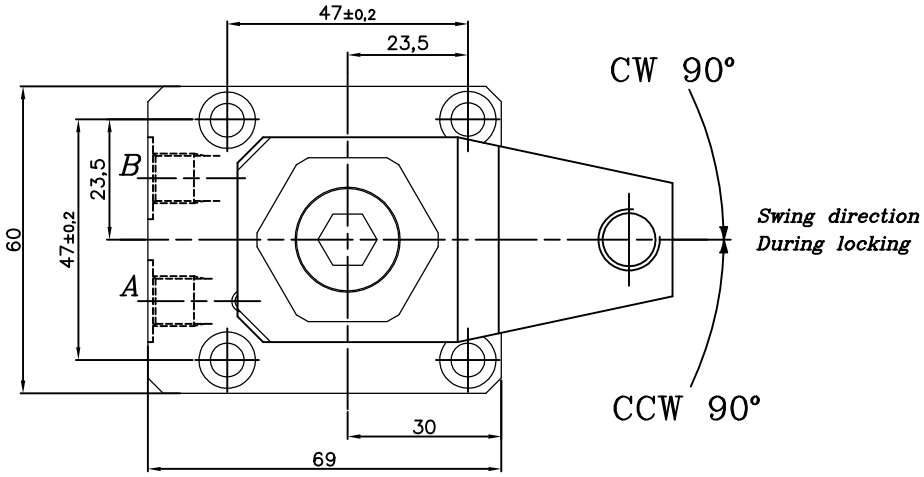

A–Clamp port
B–Declamp port

Specification:–

Type : Doble acting hydraulic cylinder.
Bore dia = 40 mm, rod dia = 25 mm
Clamp Stroke =10; Swing Stroke = 10 mm
Total Stroke = 20
Arm swing will be 90°±2°
Operating pressure : max 70 bar/min 10 bar
Medium :Hydraulic oil (servo system HLP46/HLP68)
Model NO–C.W–S46305
C.C.W–S46306

SURFACE FINISH													
Ra value µm	0.025	0.05	0.1	0.2	0.4	0.8	1.6	3.2	6.3	12.5	25	50	100

GENERAL TOLERANCES WHERE NOT SPECIFIED

LINEAR – LENGTH OR DIAMETER						ANGULAR–LENGTH IN MM OF SHORT SIDE OF ∠			
0.5–6	6–30	30–120	120–315	315–1000	1000–2000	UPTO 6	6–30	30–120	120–400
±0.1	±0.2	±0.3	±0.5	±0.8	±1.2	±1°	±30'	±20'	±10'

QUICLOC PVT LTD
B'lore - 70

SCALE:	–	TITLE: *TOP SWING CLAMP DOUBLE ACTING*	MATERIAL:
	NAME	DATE	
DESIGN	*TIRUMAL*	*16.09.09*	MACHINE TYPE
DRAWN	*TIRUMAL*	*25.09.09*	
CHECKED			CUSTOMER:
APPROVED			

SHEET NO: 1 OF: 1
GROUP NO:
SUPERCEDED BY –
REPLACES –
DRAWING NO: