SHEET FORMATS-1,FORMAT NO: F-8-DGN-09 DT.01-11-05 Rew No-00-A3

REVISION					
ZONE	REV	FROM	TO	DATE	APPROVED

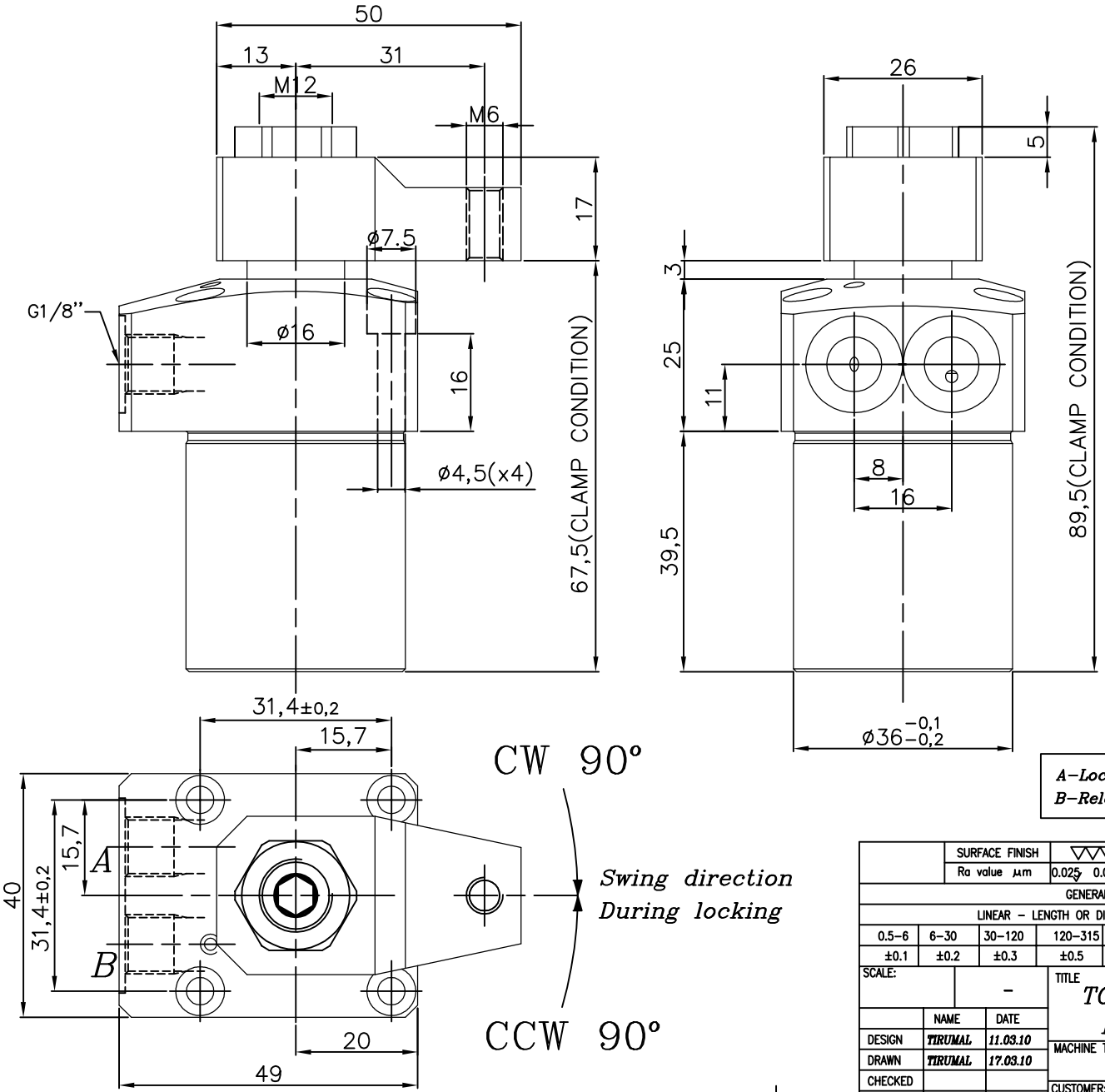

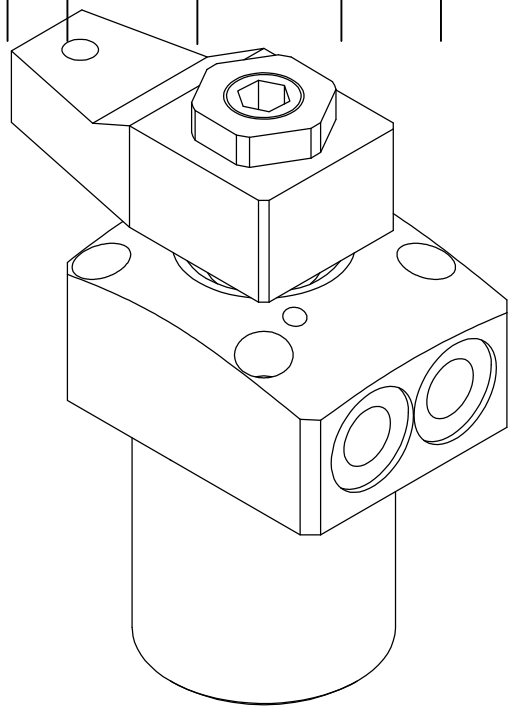

A–Lock port
B–Release port

Specification:–

Type : Doble acting hydraulic cylinder.
Bore dia = 25 mm, rod dia = 16 mm
Clamp Stroke =8; Swing Stroke = 6 mm
Total Stroke = 14
Arm swing will be 90°±3°
Operating pressure : max 70 bar/min 10 bar
Medium :Hydraulic oil
(servo system HLP46/HLP68)

SURFACE FINISH													
Ra value µm	0.025	0.05	0.1	0.2	0.4	0.8	1.6	3.2	6.3	12.5	25	50	100

GENERAL TOLERANCES WHERE NOT SPECIFIED

LINEAR – LENGTH OR DIAMETER						ANGULAR–LENGTH IN MM OF SHORT SIDE OF ∠			
0.5–6	6–30	30–120	120–315	315–1000	1000–2000	UPTO 6	6–30	30–120	120–400
±0.1	±0.2	±0.3	±0.5	±0.8	±1.2	±1°	±30'	±20'	±10'

QUICLOC PVT LTD
B'lore - 70

	NAME	DATE
DESIGN	TIRUMAL	11.03.10
DRAWN	TIRUMAL	17.03.10
CHECKED		
APPROVED		

SCALE: –

TITLE
TOP SWING CLAMP DOUBLE ACTING

MACHINE TYPE

CUSTOMER:

MATERIAL:

SHEET NO: 1 OF: 1

GROUP NO:

SUPERCEDED BY –

REPLACES –

DRAWING NO: S46301 & S46302