REVISION					
ZONE	REV	FROM	TO	DATE	APPROVED

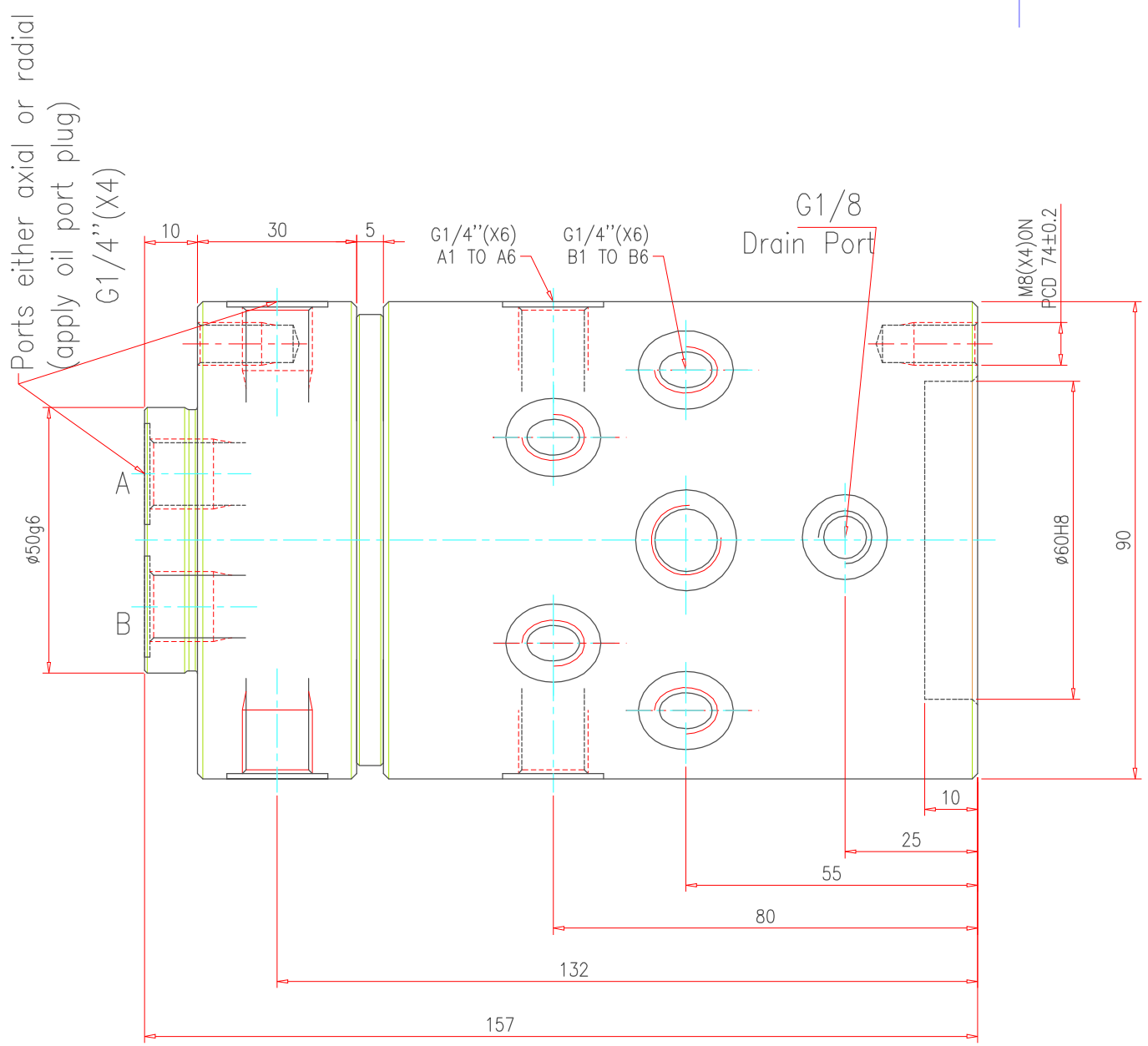

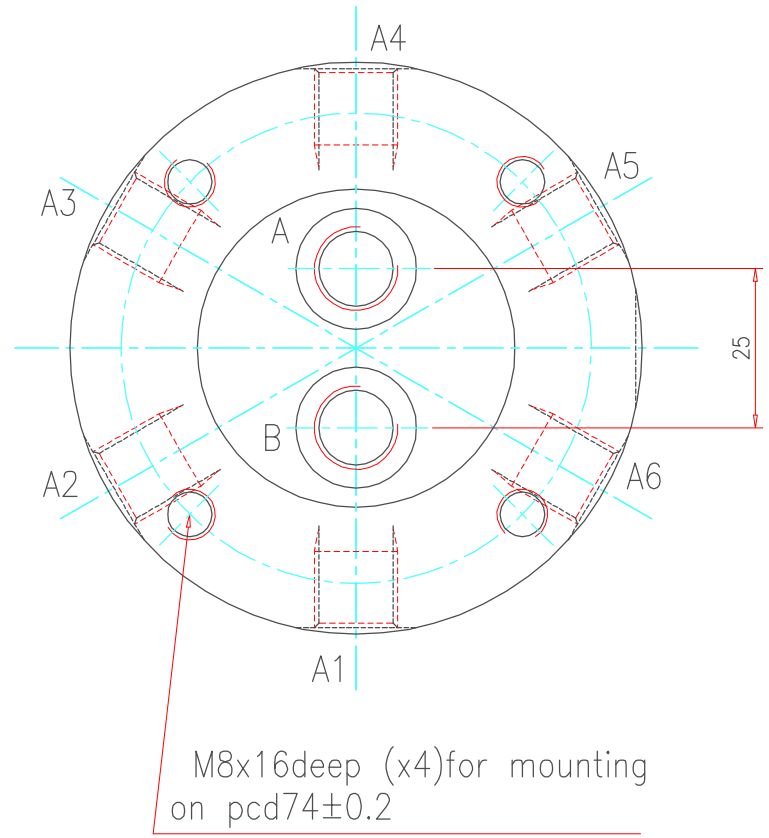

Specifications:

1. Max. operating pressure:100 bar(Lubricants via air)
2. Operating speed range: 4 RPM (max)
3. Number of Input lines to Non-rotating part: 2Hydraulic
4. Number of output lines from the Rotating part:
   1) Hydraulic -2 lines (6 Ports)
5. Hydraulic connection size: G1/4" & G1/8" ports suitable for fittings with copper washers.

NOTE

IMPORTANT:

1) Mounting should not induce side loading on to the rotary distributor Housing
   Anti-rotation mounting should not constrain the rotary distributor side ways.

2) No leak port is provided. Hence Assy will have some nominal leakages,which will Lubricate the phosphor bronze thrust bearing faces of the spaceres.

3) Use always clean filtered oil in the power pack.

SURFACE FINISH											
Ra value µm	0.025	0.05	0.1	0.2	0.4	0.8	1.6	3.2	6.3	12.5	25	50	100

GENERAL TOLERANCES WHERE NOT SPECIFIED

LINEAR - LENGTH OR DIAMETER						ANGULAR-LENGTH IN MM OF SHORT SIDE OF			
0.5-6	6-30	30-120	120-315	315-1000	1000-2000	UPTO 6	6-30	30-120	120-400
±0.1	±0.2	±0.3	±0.5	±0.8	±1.2	±1°	±30'	±20'	±10'

QUICLOC PVT LTD
B'lore - 70

SCALE		TITLE	MATERIAL	SHEET NO
1;1	–	DISTRIBUTOR	–	1 OF 1

	NAME	DATE		
DESIGN	Tirumal		MACHINE TYPE	GROUP NO.
DRAWN	Tirumal	20-09-06		SUPERCEDED BY – / REPLACES –
CHECKED			CUSTOMER:	DRAWING NO. V31202
APPROVED				