SHEET FORMATS-1,FORMAT NO: F-8-DGN-09 DT.01-11-05 Rew No-00-A3

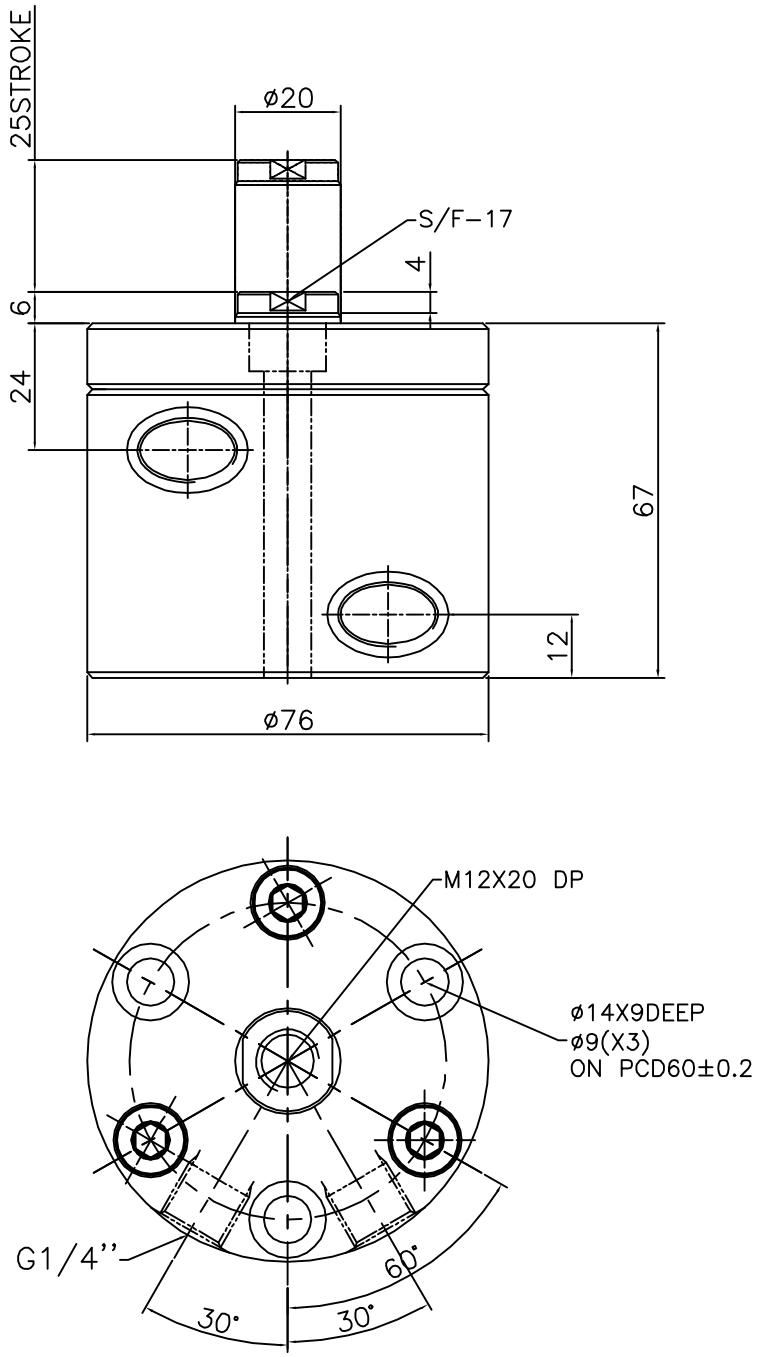

MODEL N0-A61306

Specification:-

Type : Doble acting hydraulic cylinder.
Bore dia = 40 mm, rod dia = 20 mm
Stroke = 25 mm
Operating pressure : max 150 bar/min 10 bar
Medium :Hydraulic oil
(servo system HLP46/HLP68)

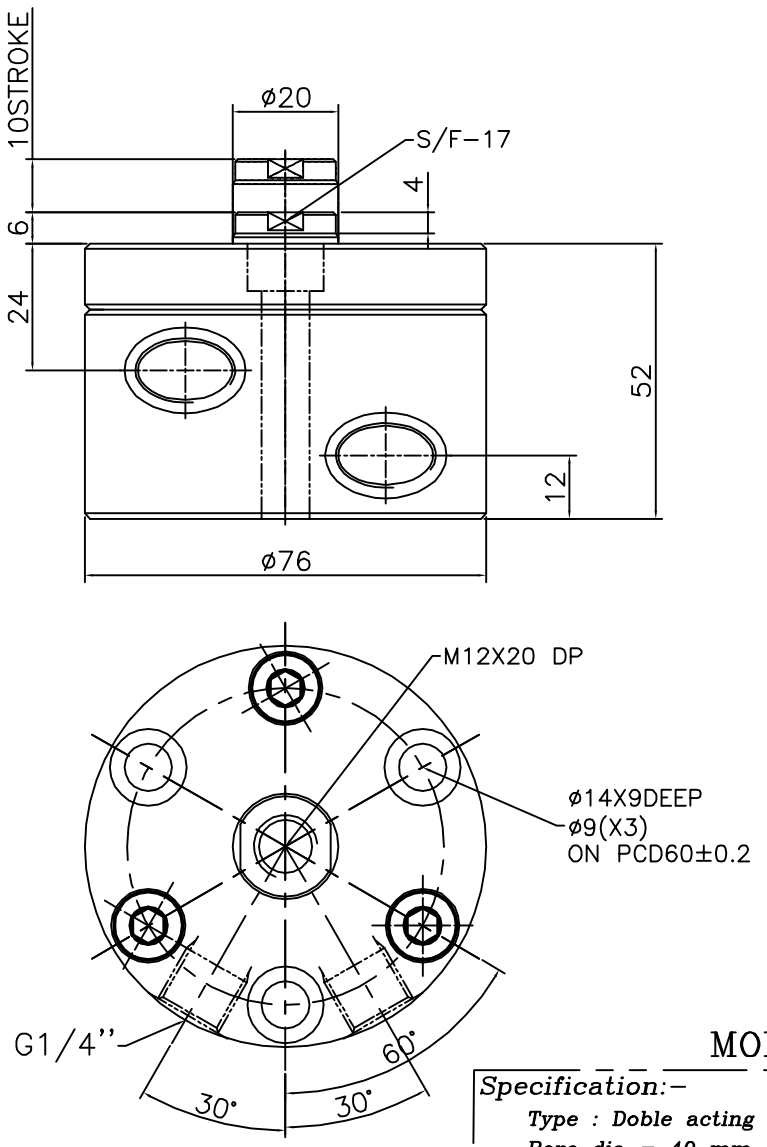

MODEL N0-A61305

Specification:-

Type : Doble acting hydraulic cylinder.
Bore dia = 40 mm, rod dia = 20 mm
Stroke = 10 mm
Operating pressure : max 150 bar/min 10 bar
Medium :Hydraulic oil
(servo system HLP46/HLP68)

1.0 GENERAL

1.1 ALL DIMENSIONS ARE IN MM.
1.2 DO NOT SCALE THE DRG.IF IN DOUBT ASK.
1.3 SUBJECT TO CHANGE FOR IMPROVEMENT.

SURFACE FINISH	▽▽▽▽	▽▽▽	▽▽	▽	∿
Ra value µm	0.025 0.05 0.1	0.2 0.4 0.8	1.6 3.2 6.3	12.5 25	50 100

GENERAL TOLERANCES WHERE NOT SPECIFIED

LINEAR - LENGTH OR DIAMETER						ANGULAR-LENGTH IN MM OF SHORT SIDE OF ∠			
0.5-6	6-30	30-120	120-315	315-1000	1000-2000	UPTO 6	6-30	30-120	120-400
±0.1	±0.2	±0.3	±0.5	±0.8	±1.2	±1°	±30'	±20'	±10'

QUICLOC PVT LTD
B'lore - 70

SCALE:		TITLE	MATERIAL:	SHEET NO:
1;1	-	COMPACT CYLINDER *Double acting, single rod end*	XXX	1 OF: 1

	NAME	DATE		GROUP NO:	
DESIGN	TIRUMAL	22.08.08	MACHINE TYPE	SUPERCEDED BY -	REPLACES -
DRAWN	TIRUMAL	22.08.08			
CHECKED			CUSTOMER:	DRAWING NO: -	
APPROVED					